Floor plan

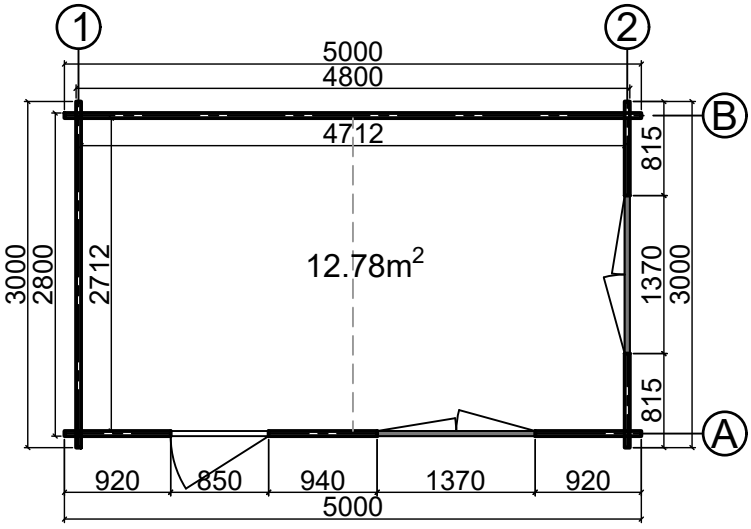

Base plan

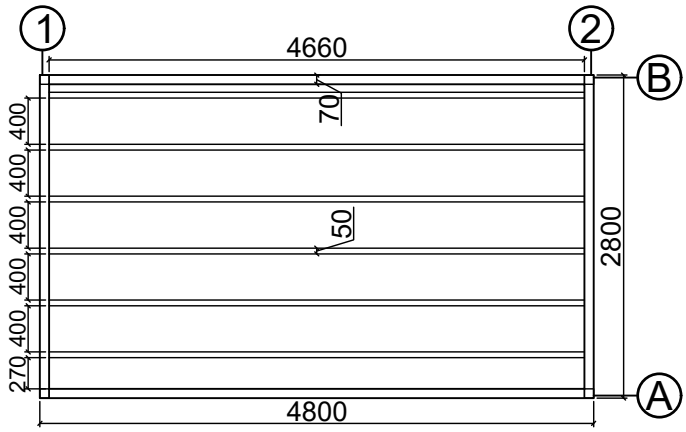

Axis A

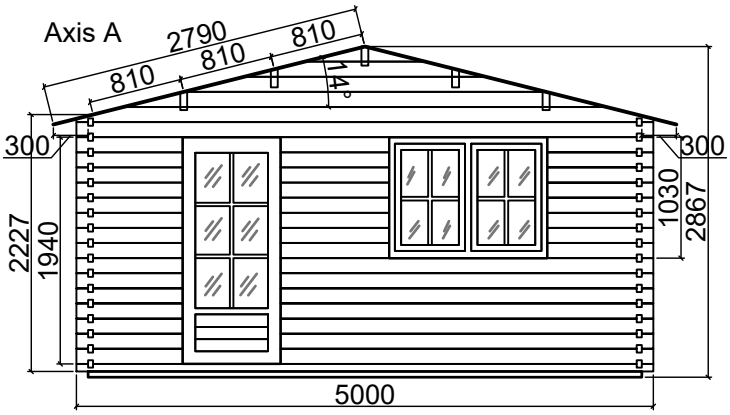

Axis 1

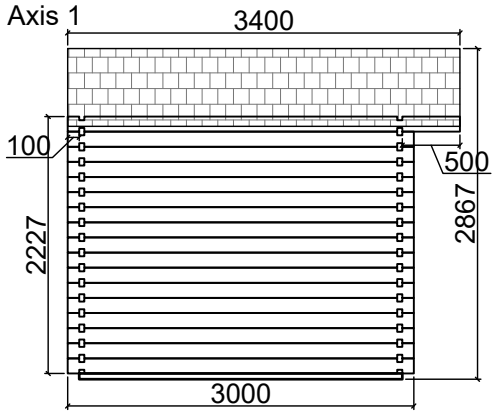

Axis B

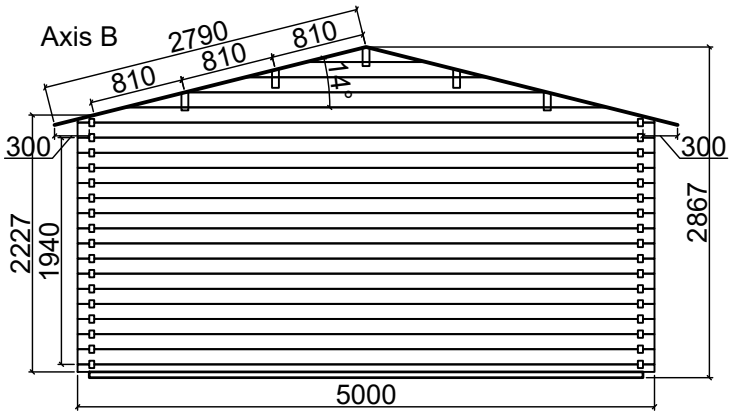

Axis 2

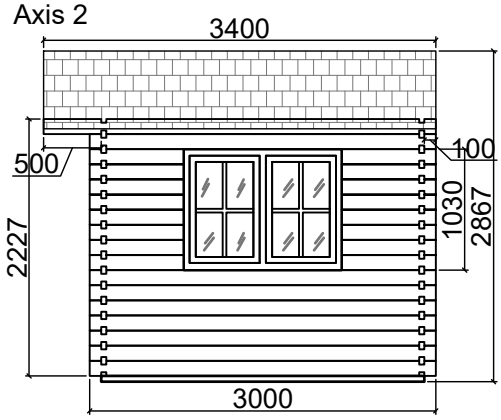

	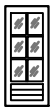	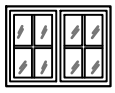
CODE	**P1**	**W3**
SIZE/mm	850x1940	1370x1030
QUANTITY	**1**	**2**
LEFT/RIGHT	**0/1**	**1/1**

CABIN SPECIFICATION

WALL LOG:	44mm
SIZE (m):	5x3
SIDE WALL HEIGHT :	2227 mm
RIDGE HEIGHT:	2867 mm
FLOOR AREA m^2:	12.78
ROOF AREA m^2:	18.97
FLOOR BOARS mm:	19