PREMIUM LOG HOUSE

Floor plan

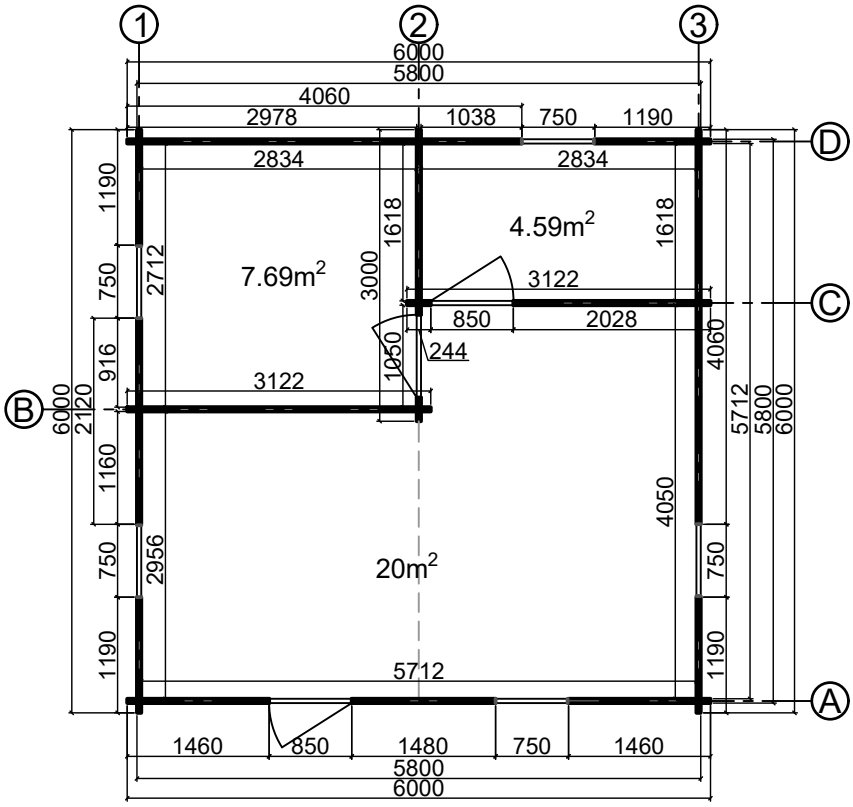

Base plan

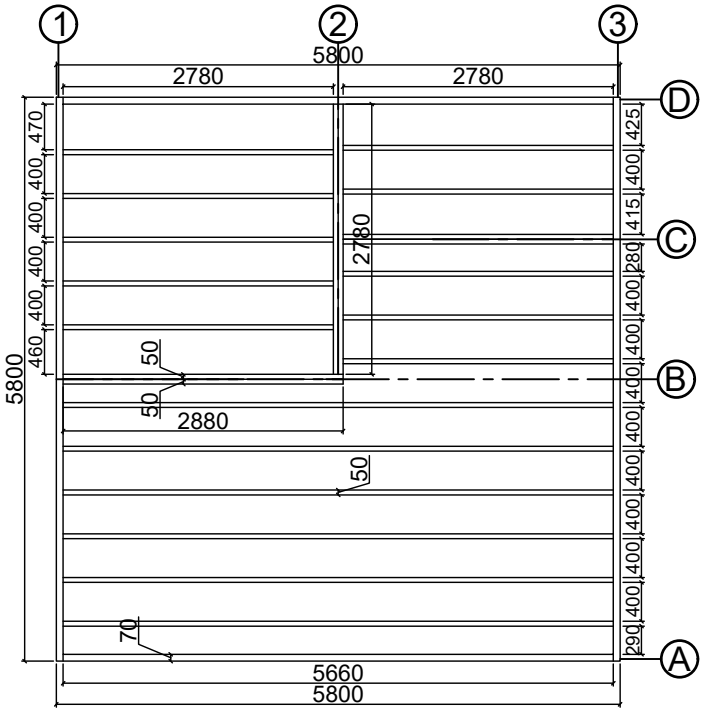

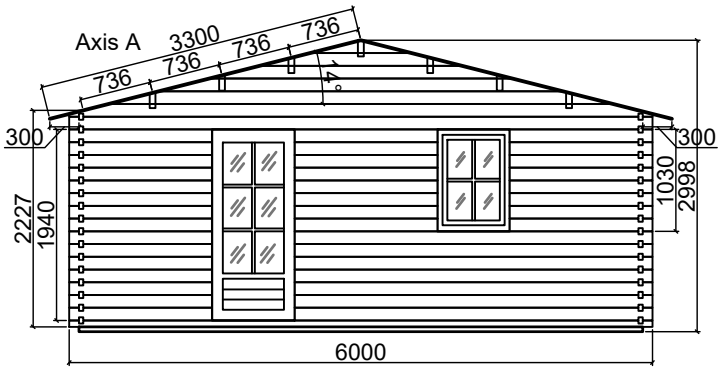

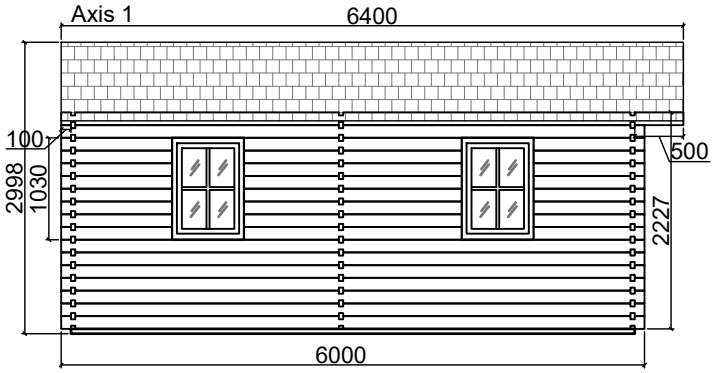

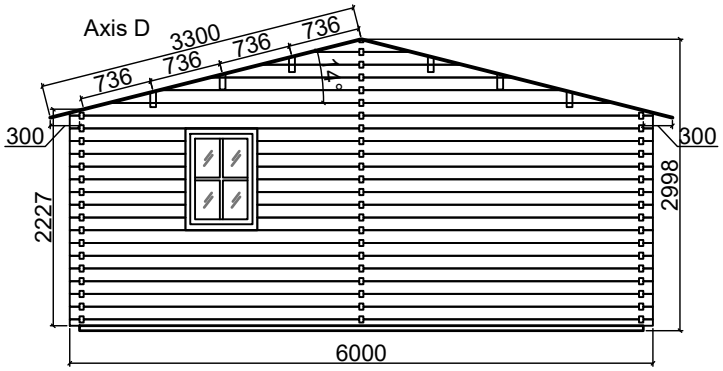

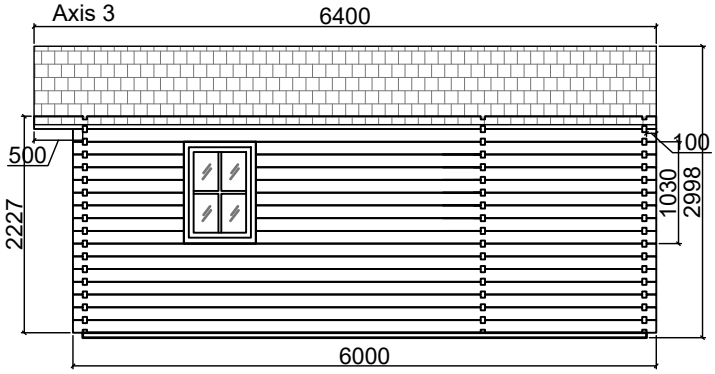

CODE	**P1**	**G4**	**W1**
SIZE/mm	850x1940	850x1940	750x1030
QUANTITY	**1**	**1**	**5**
LEFT/RIGHT	**0/1**	**0/2**	**2/3**

CABIN SPECIFICATION

WALL LOG:	44mm
SIZE (m):	6x6
SIDE WALL HEIGHT :	2227 mm
RIDGE HEIGHT:	2998 mm
FLOOR AREA m²:	32.28
ROOF AREA m²:	42.24
FLOOR BOARS mm:	19